PRODUCT DATA

HPAF SERIES FILTERS

HPAF series filters are designed to treat liquid streams in a wide variety of adsorption applications. The modular design enables the units to easily fit into a wide variety of installations. Standard features include steel construction with epoxy internal coating, efficient internal collector array, forklift skid and lifting eyes.

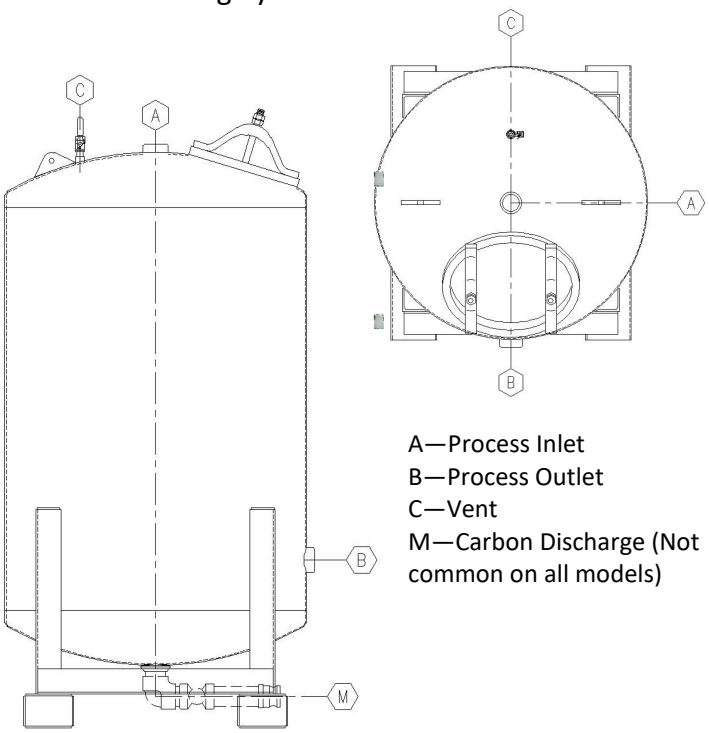

A—Process Inlet
B—Process Outlet
C—Vent
M—Carbon Discharge (Not common on all models)

HPAF SERIES STANDARD SPECIFICATIONS

Model Number	HPAF-500	HPAF-1000	HPAF-2000	HPAF-3000	HPAF-5000	HPAF-10,000	L10
Overall Height	5'11"	7'2"	8'6"	8'11"	9'11"	10'9"	15'10"
Diameter	30"	36"	48"	60"	72"	96"	120"
Process Connection	2" FNPT	2" FNPT	3" FNPT	3" FNPT	4" FNPT	6" FLNG	8" FLNG
Typical GAC Fill (28#/FT³)	500 Lbs	1,000 Lbs	2,000 Lbs	3,000 Lbs	5,000 Lbs	10,000 Lbs	20,000 Lbs
Shipping Weight (empty)	350 Lbs	535 Lbs	1,020 Lbs	1,525 Lbs	2,490 Lbs	3,800 Lbs	7,250 Lbs
Operational Weight	1,700 Lbs	3,300 Lbs	6,800 Lbs	10,700 Lbs	17,900 Lbs	31,200 Lbs	68,400 Lbs
Optimal Water Flows at standard conditions	8-25 GPM	10 to 35 gpm	15 to 70 gpm	25 to 120 gpm	35 to 165 gpm	60 to 300 gpm	100 to 480 gpm
Available Bed Volume	20 FT^3	35 FT^3	75 FT^3	117 FT^3	196 FT^3	400 FT^3	780 FT^3
Maximum Pressure	75 PSIG	75 PSIG	75 PSIG	75 PSIG	75 PSIG	75 PSIG	75 PSIG
Maximum Vacuum	28" Hg	28" Hg	28" Hg	28" Hg	28" Hg	28" Hg	28" Hg